NO.(序号)	DESCRIPTION(描述)	DCN NO.(变更号)	CHK	DATE
A0	NEW RELEASE			

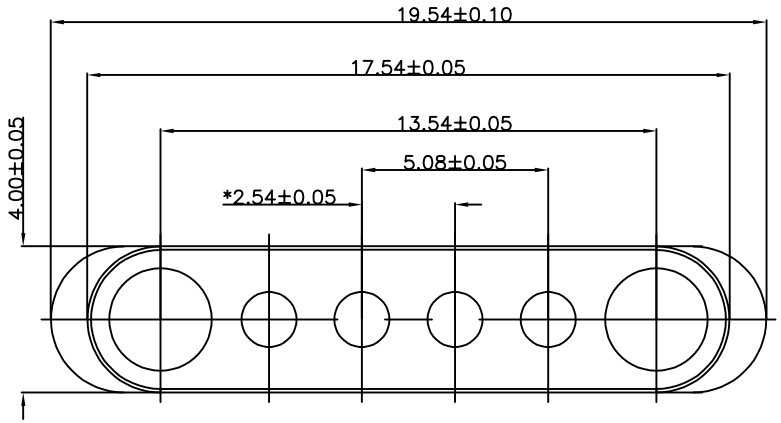

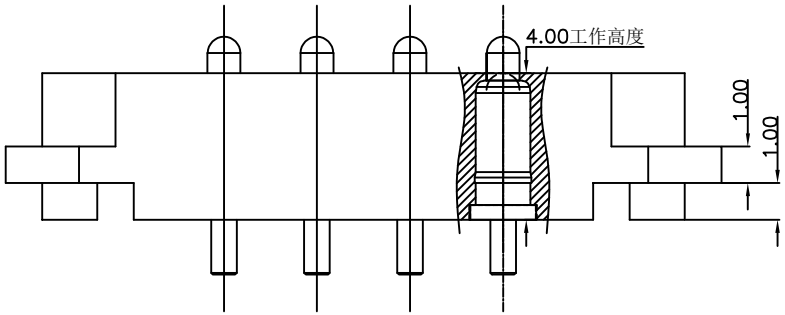

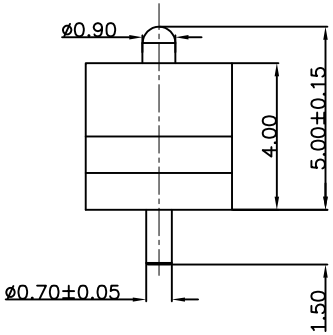

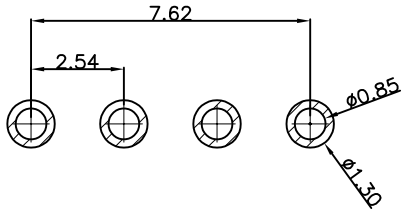

otes:
Characteristics:

A. Material(材料)
   1) Housing:High Plastic Black(UL94V-0)
   2) Plunger:brass C6801
   3) Barrel:brass C6801
   4) Magnet: N52

B. Plating(电镀)
   1) Plunger:Plating Min. 3u' Au over Min. 50u' Ni.
   2) Barrel:Plating Min. 3u' Au over Min. 50u' Ni.
   3) Spring:Plating Min. 1u' Au

C. Electrical(电器性能)
   1) Operating voltage: 12V Max.
   2) Opetating current: 2A Max.
   3) Contact resistance: 30mohm Max. at working height(Quiescence).
   1) Spring Force:45gf±10gf at working height
   2) Mechanical life: 10,000 cycle min.
   3) Don't exceed the Max. allowed compression

E. Environmental(工作环境)
   1) Storage and operating temoperature range: -40°C~+85°C
   2) Humidity range: 10% RH to 90% RH
   3) Salt spray: 48H

F. Others(其它)
   1) The dimensions marked * are critical, Should be checked in production
   2) RoHS compliant product.

DRAWN (设计)	CHJ 25.06.06	SCALE (比例)	1 : 1	UNIT (单位)	mm	DRAWING NO. (图号)	P62430103-04254PP
COUNTER SIGN (会签)		SHEET (页数)	1 of 1	PROJECT (视图)		MATERIAL (材质)	Seeing notes
AUDIT (审核)		DATE (日期)		VER (版次)	A0	TITLE (品名)	4P无耳-2.54PH磁吸-公座
APPROVE (核准)		PLATE (镀层)	Seeing notes				

THE UNMARKED TOLERANCE ARE AS BELOW:
(未标记的公差)

LENGTH(尺寸)		ANGLE(角度)	
X.XX	±0.10mm	X.XX	±0.50°
X.X	±0.15mm	X.X	±1.0°
X	±0.20mm	X	±2.50°

CTP永探® 深圳永探电子有限公司
Shenzhen Yongtan Electronics Co., LTD

The information in this document is property of YT company and should not be copied or reproduced in any other way, without written permission.